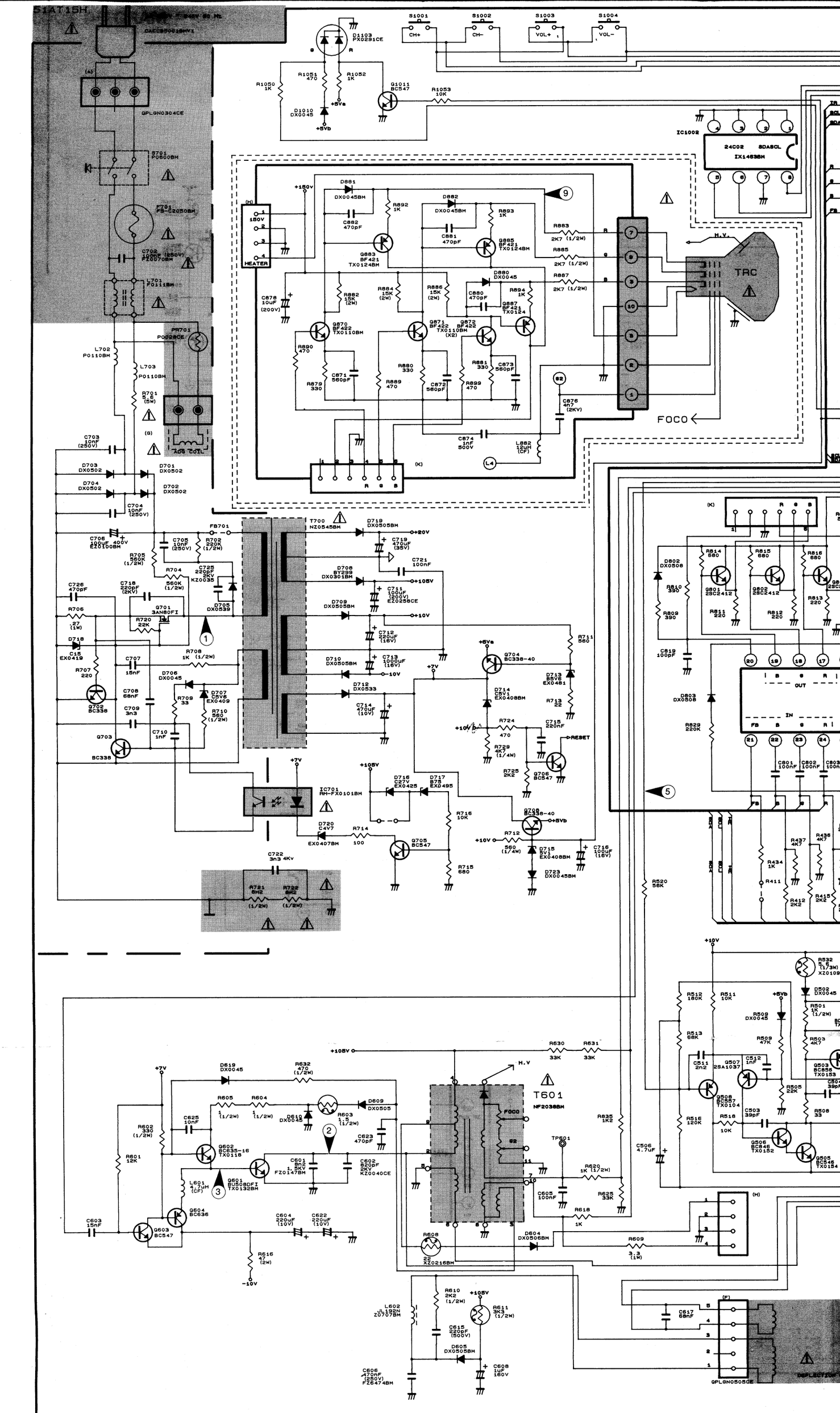
51AT15H
S1001
S1002
S1003
S1004
CH+
CH-
VOL+
VOL-
D1103
PX0281CE
R1050
1K
R1051
470
R1052
1K
D1010
DX0045
+5Va
+5Vb
Q1011
BC547
R1053
10K
IC1002
24C02
SDASCL
IX1463BM
QPLGN0304CE
S701
F0600BM
F701
FS-E2050BM
C702
4000pF (250V)
F2007BM
L701
F0118BM
PR701
P0028CE
L702
P0110BM
L703
P0110BM
R701
5.6
(5W)
AGC COIL
C703
10nF
(250V)
D703
DX0502
D704
DX0502
D701
DX0502
D702
DX0502
C704
10nF
(250V)
C706
100uF 400V
E2010BM
C705
10nF
(250V)
R702
220K
(1/2W)
R705
560K
(1/2W)
R704
560K
(1/2W)
C725
220pF
2KV
KZ0035
C726
470pF
C718
220pF
(2KV)
Q701
3AN80FI
R706
27
(1W)
R720
22K
D718
C15
EX0419
R707
220
Q702
BC338
C707
15nF
R708
1K (1/2W)
D706
DX0045
C708
68nF
R709
33
D707
C2V6
EX0409
R710
560
(1/2W)
C709
3n3
C710
1nF
Q703
BC338
D705
DX0539
FB701
T700
NZ0545BM
D719
DX0505BM
+20V
C719
470uF
(35V)
C721
100nF
D708
BY299
DX0301BM
+105V
C711
100uF
(200V)
EZ0258CE
D709
DX0505BM
+10V
C712
220uF
(16V)
D710
DX0505BM
-10V
C713
1000uF
(16V)
D712
DX0533
C714
470uF
(10V)
+5Va
Q704
BC338-40
D713
B5V6
EX0481
R711
560
D714
C5V1
EX0408BM
R713
22
R724
470
C715
220nF
RESET
R729
4K7
(1/4W)
R725
2K2
Q706
BC547
+7V
+105V
IC701
AH-FX0101BM
D716
C27V
EX0425
D717
B75
EX0495
R716
10K
Q708
BC338-40
+5Vb
D720
C4V7
EX0407BM
R714
100
Q705
BC547
R712
560
(1/4W)
D715
B7V5
EX0408BM
C716
100uF
(16V)
R715
680
D723
DX0045BM
C722
3n3 4KV
R721
6M2
(1/2W)
R722
6M2
(1/2W)
D881
DX0045BM
+150V
R892
1K
C882
470pF
Q883
BF421
TX0124BM
D882
DX0045BM
R893
1K
C881
470pF
Q885
BF421
TX0124BM
R883
2K7 (1/2W)
R885
2K7 (1/2W)
R887
2K7 (1/2W)
H.V.
TRC
HEATER
150V
R882
15K
(2W)
R884
15K
(2W)
R886
15K
(2W)
D880
DX0045
C880
470pF
R894
1K
Q887
BF421
TX0124
C878
10uF
(200V)
Q870
BF422
TX0110BM
Q871
BF422
TX0110BM
(X2)
Q872
BF422
R890
470
R880
330
R881
330
C873
560pF
C871
560pF
R879
330
R889
470
C872
560pF
R899
470
C876
4n7
(2KV)
FOCO
C874
1nF
500V
L882
12uH
(CF)
D802
DX0508
R814
680
R815
680
R816
680
Q801
2SC2412
Q802
2SC2412
R810
390
R813
220
R811
220
R812
220
R809
390
C819
100pF
D803
DX0508
R829
220K
OUT
IN
C801
100nF
C802
100nF
R520
56K
R434
1K
R411
R437
4K7
R412
2K2
R415
2K2
R532
3.7
(1/3W)
XZ0109
D502
DX0045
R512
180K
R511
10K
R509
DX0045
R501
1K
(1/2W)
R513
68K
R509
47K
R503
4K7
C511
2n2
Q507
2SA1037
C512
1nF
Q503
BC856
TX0153
Q508
BC557
TX0104
R505
22K
C507
39pF
C503
39pF
R518
10K
R508
33
Q506
BC846
TX0152
Q505
BC846
TX0154
R516
120K
C506
4.7uF
R630
33K
R631
33K
+105V
H.V
T601
NF2038BM
FOCO
TP601
R635
1K2
R620
1K (1/2W)
C605
100nF
R625
33K
R618
1K
R608
22
XZ0216BM
D604
DX0506BM
R609
3.3
(1W)
+7V
D619
DX0045
R632
470
(1/2W)
R605
1
(1/2W)
R604
1
(1/2W)
D609
DX0505
D610
DX0045
R603
1.5
(1/2W)
C625
10nF
C623
470pF
R602
330
(1/2W)
Q602
BC635-16
TX0116
C601
8n2
1.5KV
FZ0147BM
C602
820pF
2KV
KZ0040CE
R601
12K
L601
4.7uH
(CF)
Q601
BU508DFI
TX0132BM
Q604
BC636
C603
15nF
Q603
BC547
C604
220uF
(10V)
C622
220uF
(10V)
R616
47
(2W)
-10V
L602
JL192N
Z0707BM
R610
2K2
(1/2W)
+105V
R611
3K3
(1/2W)
C615
220pF
(500V)
D605
DX0505BM
C606
470nF
(250V)
FZ6474BM
C608
1uF
160V
C617
68nF
QPLGN0505CE
DEFLECTION

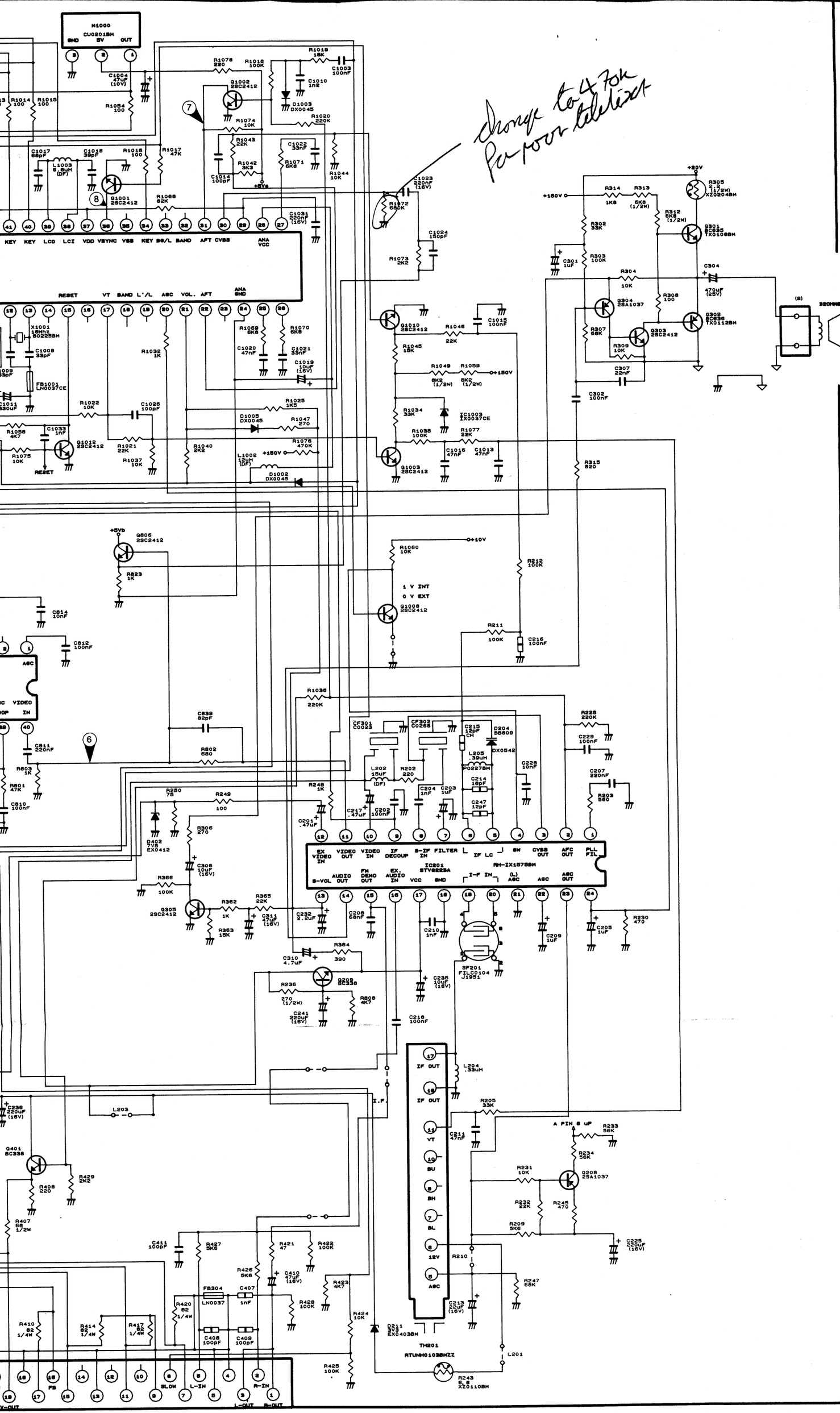
change to 4.70k for poor teletext
M1000
CU02015M
GND 5V OUT
KEY KEY LCD LCI VDD VSYNC VSS KEY S6/L BAND AFT CVBS
ANA VCC
RESET VT BAND L'/L ASC VOL. AFT
ANA GND
EX VIDEO IN
VIDEO OUT
VIDEO IN
IF DECOUP
S-IF IN
FILTER
IF LC
SW
CVBS OUT
AFC OUT
PLL FIL
S-VOL OUT
AUDIO OUT
FM DEMO OUT
EX. AUDIO IN
VCC
GND
I-F IN
(L) AGC
ASC
ASC OUT
IC201
STV9223A
RH-IX1575M
SF201
FILC0104
J1951
IF OUT
IF OUT
VT
SU
SH
SL
12V
AGC
TH201
RTUNH0103MZZ
I.F.
A PIN 5 uF
SLOW
L-IN
R-IN
L-OUT
R-OUT
V-OUT
FB
+150V
+10V
+5Vs
+5Vb
1 V INT
0 V EXT

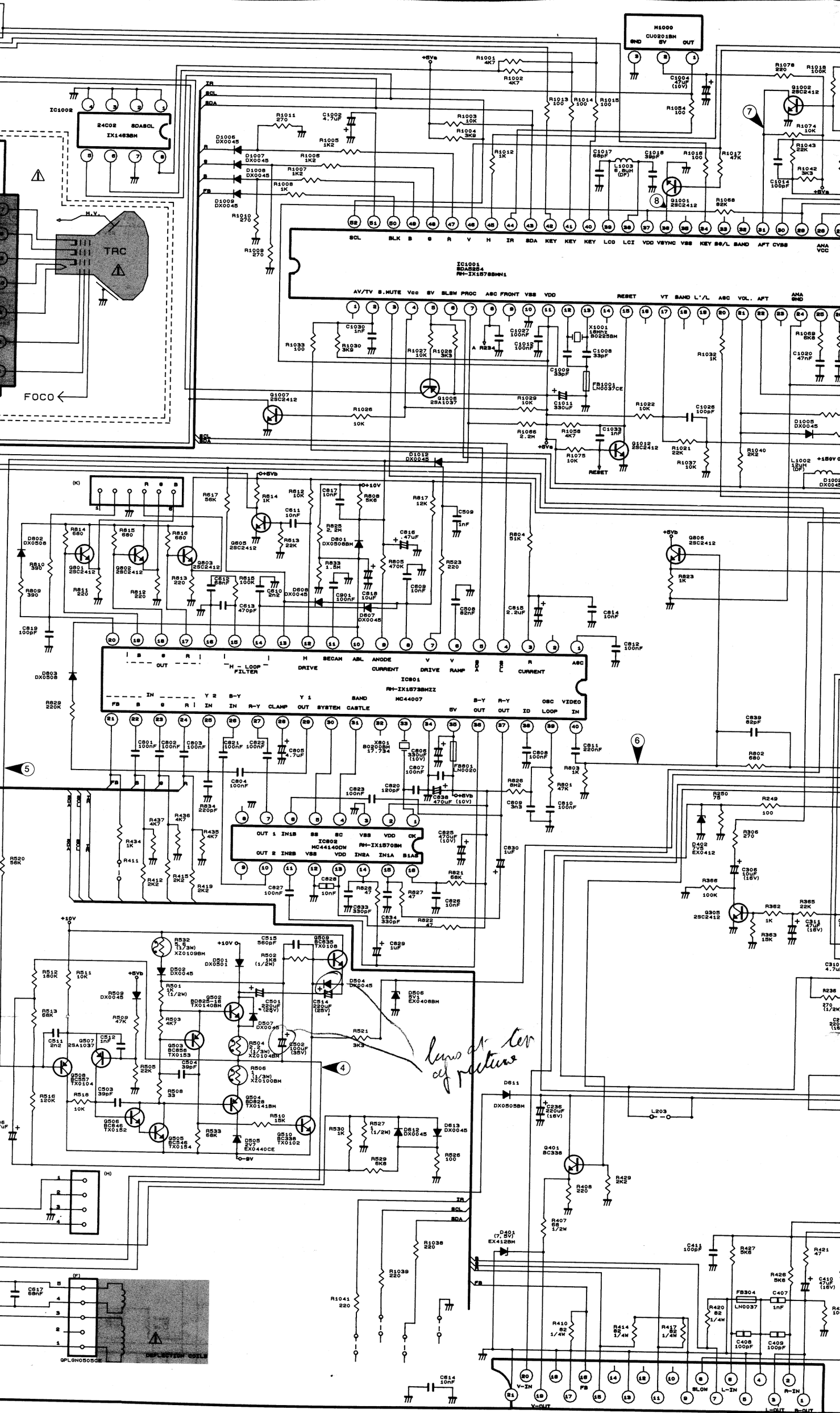
IC1002
24C02 SDASCL
IX1463BM
TRC
H.V.
FOCO
M1000
CU0201BM
GND 5V OUT
IC1001
SDA5254
RH-IX1578BMN1
SCL BLK B G R V H IR SDA KEY KEY KEY LCO LCI VDD VSYNC VSS KEY S0/L SAND AFT CVBS
AV/TV S.MUTE Vcc SV SLSW PROC ASC FRONT VSS VDD RESET VT SAND L'/L ASC VOL. AFT
IC901
RH-IX1573BMZZ
MC44007
IC802
MC44140DW
RH-IX1570BM
DEFLECTION COILS
GPLGN0505CE
Lens at tier of picture